Speedrite™
DATAMARS

EXTREME GEARED REEL OPERATING INSTRUCTIONS

WIRE/TAPE ATTACHMENT

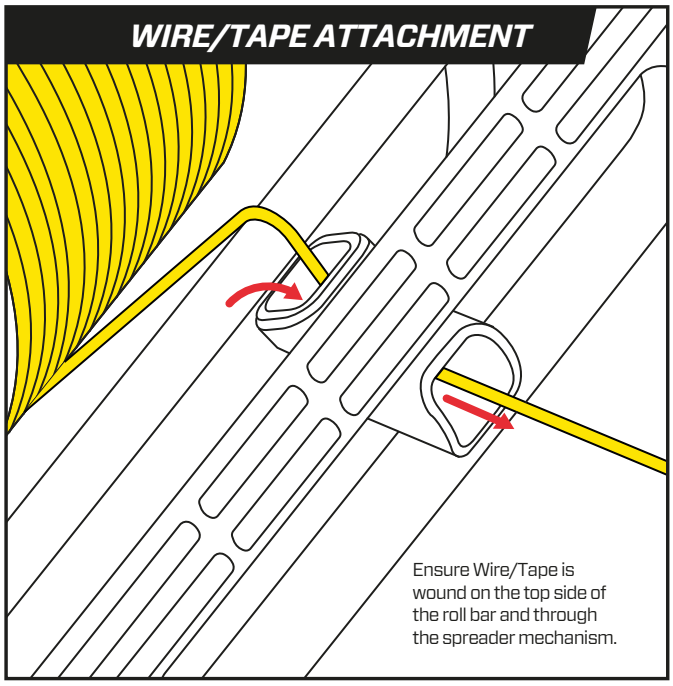

Ensure Wire/Tape is wound on the top side of the roll bar and through the spreader mechanism.

BIKE & FENCE LOCK

Pull the trigger to open the jaw to fence wire or a bike bar. Release to automatically lock.

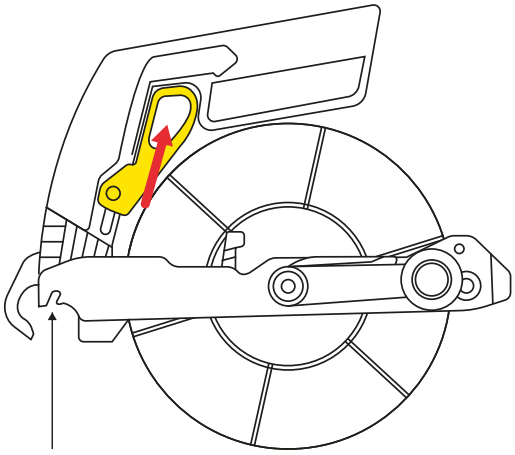

ELECTRIFICATION

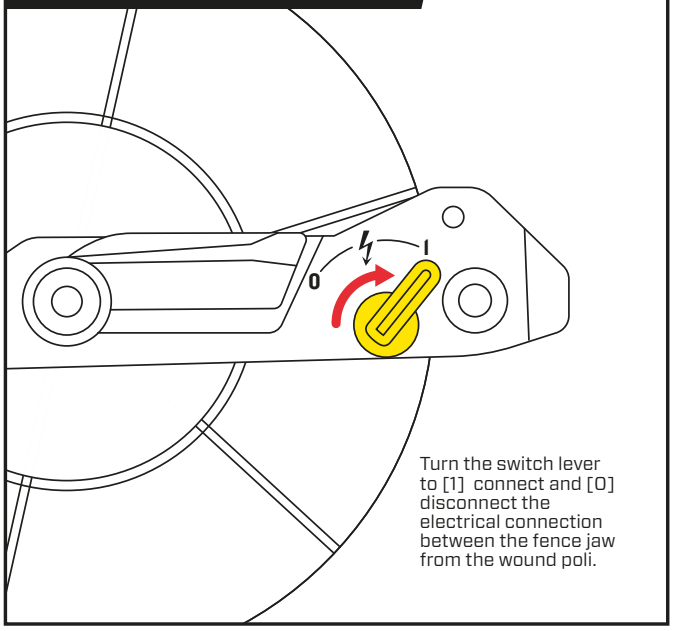

Turn the switch lever to [1] connect and [0] disconnect the electrical connection between the fence jaw from the wound poli.

IN USE - REELING OUT

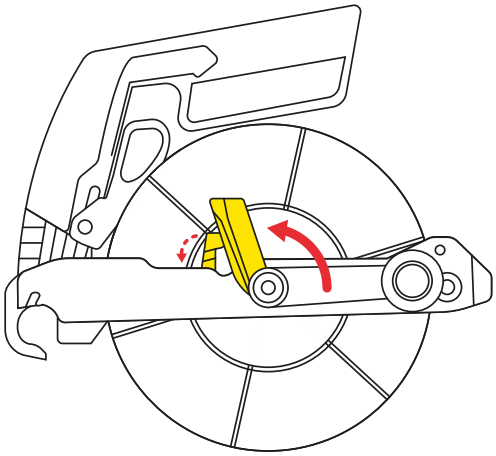

Pull the lever back to engage drag.
This also moves the pawl out of the way.

IN USE - REELING IN

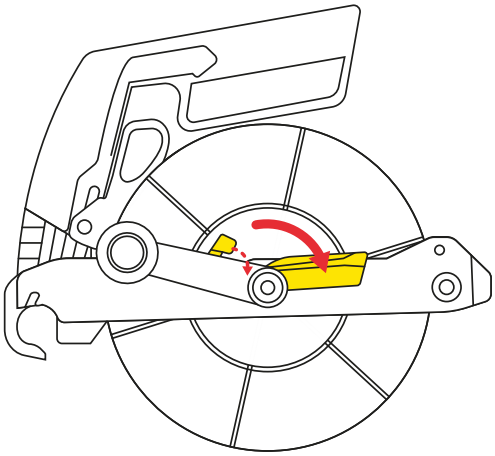

Push the lever forward to dis-engage drag.
This also lets the pawl engage to stop reeling out.

4012SPE02 EXTREME GEARED REEL OPERATING INSTRUCTIONS ISSUE 2 07/22